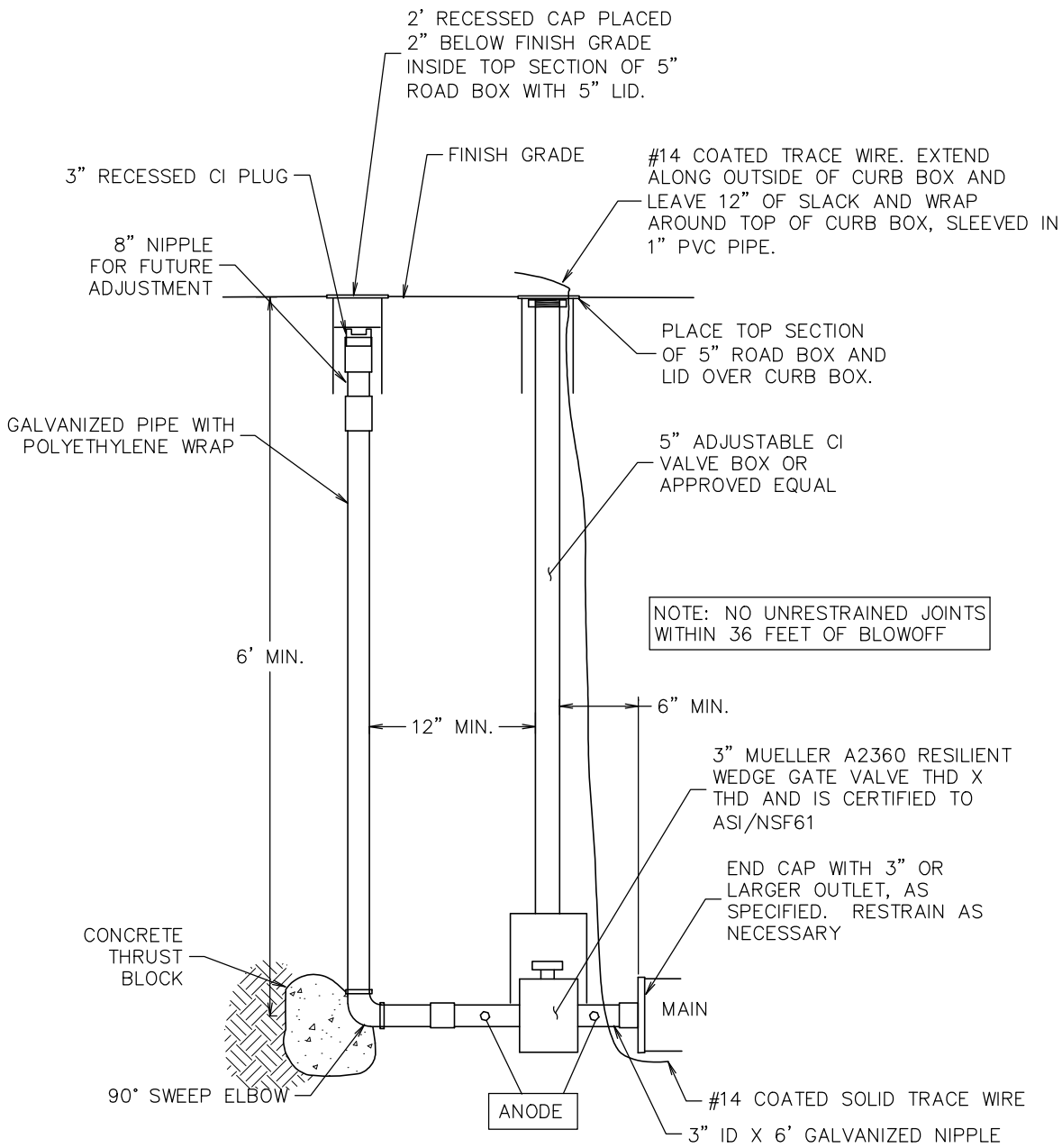

Engineering Division

Typical Blow-Off Assembly

Approved By
Utilities Engineer
Logan McInnis, PE

Revised: 09/28/2020

STD - 409